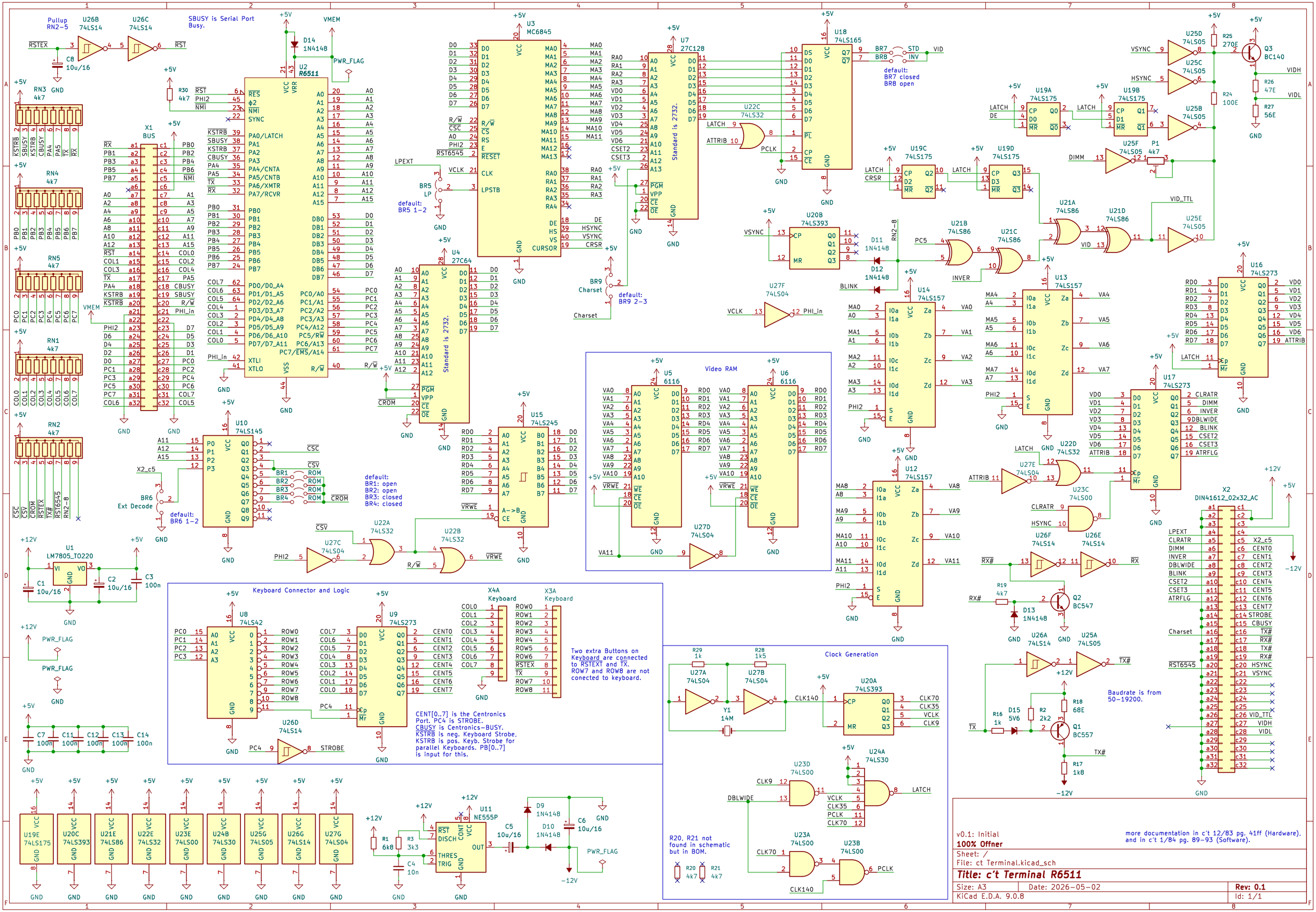
Pullup RN2-5
U26B 74LS14
U26C 74LS14
SBUSY is Serial Port Busy.
U2 R6511
U3 MC6845
U7 27C128
Standard is 2732.
U18 74LS165
U25D 74LS05
U25C 74LS05
U25B 74LS05
U25F 74LS05
U25E 74LS05
U19A 74LS175
U19B 74LS175
U19C 74LS175
U19D 74LS175
U21A 74LS86
U21D 74LS86
U21B 74LS86
U21C 74LS86
U20B 74LS393
U27F 74LS04
U4 27C64
U10 74LS145
U15 74LS245
U22A 74LS32
U22B 74LS32
U27C 74LS04
U22C 74LS32
U27D 74LS04
U14 74LS157
U13 74LS157
U12 74LS157
U16 74LS273
U17 74LS273
U22D 74LS32
U23C 74LS00
U26F 74LS14
U26E 74LS14
U27E 74LS04
U26A 74LS14
U25A 74LS05
U1 LM7805_TO220
Video RAM
U5 6116
U6 6116
Keyboard Connector and Logic
U8 74LS42
U9 74LS273
X4A Keyboard
X3A Keyboard
Two extra Buttons on Keyboard are connected to RSTEXT and TX. ROW7 and ROW8 are not conected to keyboard.
CENT[0..7] is the Centronics Port. PC4 is STROBE. CBUSY is Centronics-BUSY. KSTRB is neg. Keyboard Strobe, KSTRB is pos. Keyb. Strobe for parallel Keyboards. PB[0..7] is input for this.
Clock Generation
U20A 74LS393
U23D 74LS00
U24A 74LS30
U23A 74LS00
U23B 74LS00
R20, R21 not found in schematic but in BOM.
U19E 74LS175
U20C 74LS393
U21E 74LS86
U22E 74LS32
U23E 74LS00
U24B 74LS30
U25G 74LS05
U26G 74LS14
U27G 74LS04
U11 NE555P
X2 DIN41612_02x32_AC
Baudrate is from 50-19200.
v0.1: Initial
100% Offner
more documentation in c't 12/83 pg. 41ff (Hardware), and in c't 1/84 pg. 89-93 (Software).
Sheet: /
File: ct Terminal.kicad_sch
Title: c't Terminal R6511
Size: A3
Date: 2026-05-02
Rev: 0.1
KiCad E.D.A. 9.0.8
Id: 1/1